Electrolux

air-o-steam
class B Natural Gas Combi Oven
6GN 1/1

ITEM #

MODEL #

NAME #

SIS #

AIA #

268780 (AOS061GBW2) air-o-steam, gas, 6x1/1GN, automatic cleaning function, B - Uk, Middle East

Short Form Specification

Item No.

Convection-steamer with dedicated steam generator guarantees a continuous supply of steam at all times. Boiler in 316L to protect against corrosion.
air-o-flow: fresh air is blown into the oven from the outside, after it is pre-heated it is pulled through the bi-functional fan, guaranteeing cooking evenness.
Humidity controlled through By-pass technology that guarantees the efficient use of the steam generator thus reducing water and energy consumption. Manual injection of water to add additional moisture in the cell.
air-o-clean: built-in cleaning system with four automatic pre-set cycles and one semi-automatic cleaning cycle.
Cooking cycles: steam (100 °C), low temperature steam (25-99 °C), overheated steam (101-130°C), hot air (25-300 °C), combi (25-250 °C), regeneration. 2-step cooking with the possibility to combine different cycles. Half power, half speed and pulse ventilation controls. Food probe for precise cooking. Double-glass door with book-like opening maintains a cool external temperature and incorporates a drip pan to collect excess condensation avoiding wet floors. Halogen lighting in the cooking chamber. Side panels and interior in AISI 304 stainless steel.

Supplied with n.1 tray rack 1/1GN, 65mm pitch.

APPROVAL:

Electrolux
air-o-steam
class B Natural Gas Combi Oven 6GN 1/1

Electrolux

air-o-steam class B Natural Gas Combi Oven 6GN 1/1

Main Features

- Fan speeds: full, half speed for delicate pulse cooking such as for baking cakes and pulse ventilation for baking and low temperature cooking. The "pulse utility" is also perfect for keeping food warm at the end of the cooking cycle.
- Single sensor core temperature probe included.
- Reduced power cycle.
- air-o-clean™ automatic and built-in self cleaning system (4 automatic and 1 semi-automatic cycles).
- Low temperature Steam cycle 25 °C to 99.4 °C: ideal for sous-vide (vacuum packed) re-thermalization and delicate cooking.
- Steam cycle 100 °C: seafood and vegetables.
- High temperature steam 100.5 °C - 130 °C.
- Combination cycle 25 °C to 250 °C: combining convected heat and steam to obtain humidity controlled cooking environment, accelerating the cooking process and reducing weight loss.

Construction

- High efficiency and low emissions burners.
- IPX 5 spray water protection certification for easy cleaning.
- 304 AISI stainless steel construction throughout.
- Seamless hygienic cooking chamber with all rounded corners for easy cleaning.
- Double thermo-glazed door with open frame construction, for cool outside door panel. Swing hinged easy-release inner glass on door for easy cleaning.
- Swing hinged front panel for easy service access to main components.

The company reserves the right to make modifications to the products without prior notice. All information correct at time of printing.

2018.05.02

Electrolux

air-o-steam class B Natural Gas Combi Oven 6GN 1/1

Included Accessories

- 1 of Control panel filter for 6&10 GN 1/1 ovens — PNC 922246

Optional Accessories

- Flue condenser for hood for 6 GN 1/1 and 10 GN 1/1 gas ovens. The flue condenser is mandatory on installations with ventilation hoods (640791 - 640792) — PNC 640413 ❑
- Exhaust hood without fan for 6&10 1/1GN ovens. It is mandatory to use the flue condenser (640413) on installation with gas ovens — PNC 640791 ❑
- Exhaust hood with fan for 6&10x1/1 GN ovens. It is mandatory to use the flue condenser (640413) on installation with gas ovens — PNC 640792 ❑
- Integrated odourless hood for air-o-steam/air-o-convect 6GN1/1 and 10GN1/1, electric — PNC 640797 ❑
- WATER SOFTNER WITH CARTRIDGE C500 — PNC 920002 ❑
- WATER SOFTENER WITH CARTRIDGE STEAM 1200 — PNC 920003 ❑
- Automatic water softener for ovens — PNC 921305 ❑
- Resin sanitizer for water softener — PNC 921306 ❑
- Castor kit for base for 6&10x1/1 and 2/1 GN ovens — PNC 922003 ❑
- Trolley for 6&10x1/1GN ovens and bcf — PNC 922004 ❑
- Tray rack with wheels for 6x1/1 GN ovens and bcf, 65mm pitch — PNC 922005 ❑
- Tray rack with wheels for 5x1/1 GN ovens and bcf, 80mm pitch — PNC 922008 ❑
- Kit 4 adjustable feet for 6&10 GN ovens — PNC 922012 ❑
- Pair of 1/1 GN AISI 304 grids — PNC 922017 ❑
- Tray support for 6&10x1/1GN open base — PNC 922021 ❑
- Couple of grids for whole chicken 1/1GN (8 per grid) — PNC 922036 ❑
- Pastry tray rack with wheels, for 6x1/1GN oven, 80mm pitch (5 runners). Allows use of 400x600mm pastry trays — PNC 922065 ❑
- Slide-in rack and handle for 6&10x1/1GN ovens — PNC 922074 ❑
- Grid GN 1/1 for 4 whole chickens (1,2 kg each) — PNC 922086 ❑
- External connection kit for detergent and rinse aid — PNC 922169 ❑
- Retractable hose reel spray unit — PNC 922170 ❑
- Side external spray unit (needs to be mounted outside and includes support for mounting to oven) — PNC 922171 ❑
- Fat filter for 6x1/1GN — PNC 922177 ❑
- Baking tray with 5 rows (baguette), perforated aluminium with silicon coating (400x600x38) — PNC 922189 ❑
- Baking tray with 4 edges, perforated aluminium (400x600x20) — PNC 922190 ❑
- Baking tray with 4 edges, aluminium (400x600x20) — PNC 922191 ❑
- Open base with tray support for 6&10x1/1GN ovens — PNC 922195 ❑
- Basket for detergent tank - wall mounted — PNC 922209 ❑
- Holder for detergent tank, to mount on open base — PNC 922212 ❑
- Cupboard base and tray support for 6&10x1/1GN ovens — PNC 922223 ❑
- Hot cupboard base with humidifier for 6&10x1/1GN ovens, with support for 1/1GN and 600x400mm trays — PNC 922227 ❑
- Flue condenser for gas ovens — PNC 922235 ❑
- 2 frying baskets for ovens — PNC 922239 ❑
- Heat shield for stacked 6x1/1 GN on 6x1/1 GN ovens — PNC 922244 ❑
- Heat shield for stacked 6x1/1 GN on 10x1/1 GN ovens — PNC 922245 ❑
- Control panel filter for 6&10 GN 1/1 ovens — PNC 922246 ❑
- Heat shield for 6x1/1 GN oven — PNC 922250 ❑
- Double-click closing catch for oven door — PNC 922265 ❑
- Grid for whole chicken 1/1GN (8 per grid - 1,2kg each) — PNC 922266 ❑
- Kit integrated Haccp for ovens — PNC 922275 ❑
- Kit to convert from natural gas to LPG — PNC 922277 ❑
- Bakery rack kit for 6 GN1/1 ovens — PNC 922282 ❑
- Drain kit for 6&10x1/1GN, 10x2/1 oven, diameter 50mm — PNC 922283 ❑
- Pastry runners (400x600mm) for 6&10x1/1 GN oven bases — PNC 922286 ❑
- Grease collection kit (tray and trolley) — PNC 922287 ❑
- Stacking kit for gas 6x1/1 GN oven placed on gas 6&10x1/1 GN oven including kit pipes and external connection of detergent and rinse aid — PNC 922318 ❑
- Kit flanged feet — PNC 922320 ❑
- Fat collection tray 100 mm — PNC 922321 ❑
- Trolley for slide-in rack on stacked ovens (needed for the oven that will be stacked below) — PNC 922323 ❑
- Kit universal skewer rack and 4 long skewers for Lengthwise ovens — PNC 922324 ❑
- Universal skewer rack — PNC 922326 ❑
- 4 long skewers — PNC 922327 ❑
- Fat collection tray 40 mm — PNC 922329 ❑
- Stacked oven riser 2x6GN1/1 + feet (H250mm) — PNC 922330 ❑
- Riser for stacked oven 2x6 GN 1/1 with wheels, height 250mm — PNC 922331 ❑
- Wheels for stacked oven 2x 6 GN 1/1 or 6 GN 1/1 on 10 GN1/1 — PNC 922333 ❑
- Smoker for lengthwise and crosswise ovens - 4 kinds of smoker wood chips are available on request — PNC 922338 ❑
- Water filter for ovens - 2 membranes — PNC 922342 ❑
- External reverse osmosis filter for ovens - 2 membranes — PNC 922343 ❑
- Chimney adaptor — PNC 922346 ❑
- Kit check valve — PNC 922347 ❑
- Multipurpose hook — PNC 922348 ❑
- - NOT TRANSLATED - — PNC 922363 ❑
- FLAT BAKING TRAY WITH 2 EDGES-GN1/1 — PNC 925006 ❑

The company reserves the right to make modifications to the products without prior notice. All information correct at time of printing.

2018.05.02

air-o-steam
class B Natural Gas Combi Oven
6GN 1/1

Front

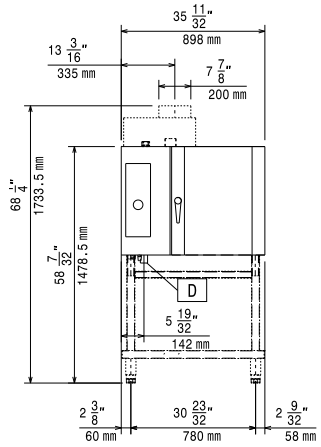

Side

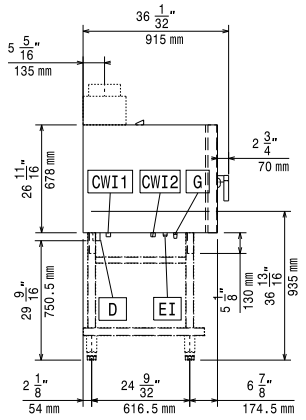

CWI1 = Cold Water inlet
CWI2 = Cold Water Inlet 2
D = Drain
EI = Electrical connection
G = Gas connection

Top

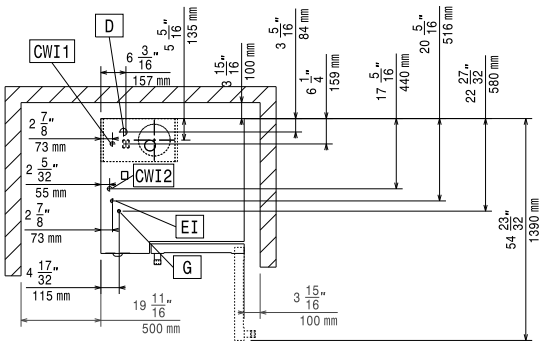

Electric

Supply voltage:	
268780 (AOS061GBW2)	220-230 V/1 ph/50/60 Hz
Electrical power, max:	0.25 kW
Circuit breaker required	

Gas

ISO 7/1 gas connection diameter:	1/2" MNPT
Natural gas	
Pressure:	7" w.c. (17.4 mbar)
Steam generator:	10 kW
Heating elements:	34090 BTU/h (10 kW)

Water

Water inlet "CW" connection	3/4"
Total hardness:	5-50 ppm
Pressure, bar min/max:	1.5-4.5 bar
Drain "D":	1"1/4

Electrolux recommends the use of treated water, based on testing of specific water conditions.

Please refer to user manual for detailed water quality information.

Installation

Clearance:	Clearance: 5 cm rear and right hand sides.
Suggested clearance for service access:	50 cm left hand side.

Capacity

GN:	6 - 1/1 Gastronorm
Max load capacity:	30 kg

Key Information

External dimensions, Width	898 mm
External dimensions, Height	808 mm
External dimensions, Depth	915 mm
Shipping weight:	165 kg
Shipping volume:	1 m³

The company reserves the right to make modifications to the products without prior notice. All information correct at time of printing.

2018.05.02